Analog DECT Phone



AGR-8106-SMKND

QIG

V 1.00

1 Over view

This phone is a full-feature telephone that provides voice communication. Read this QIG carefully to learn how to operate this product and take advantage of its features.

Package Contents

When unpacking the phone, ensure all the following items are present and undamaged. If anything appears to be missing or broken, contact your dealer for a replacement.

1. **Base Unit**
2. **Cordless Handset**
3. **Stand**
4. **Battery**
5. **AC Adaptor**
6. **2 wire Line Cord (with RJ-11 connector)**
7. **Quick Installation Guide (This document)**

2 Product Description

The following contains important information to help you familiarize with the functions of the analog phone.

Front View



1. Handset keys

	Name	Description
1	Message waiting indicator	To indicate an incoming call or unheard voice messages.
2	Speed dial keys	Press to dial the preset number.
3	LINE key	Press to make a phone call
4	End key	Press to end a phone call
5	Function keys	
	MUTE	Press to mute handset MIC.
	SPEAKER	Press to activate the speakerphone for hands free conversations.
	VOLUME	Press to increase or decrease the volume of the ringer tone, handset, or speakerphone.
6	Alphanumerical keys	Press these keys to enter phone numbers.

2 Base unit keys

	Name	Description
1	Message waiting indicator	To indicate an incoming call or unheard voice messages.
2	Speed dial keys	Press to dial the preset number.
3	LINE key	To indicate the line been used as the following status: - Idle: No LED indication. - In call: Red LED.
4	End key	Press to end a phone call
5	Function keys	
	MUTE	Press to mute base unit MIC.
	SPEAKER	Press to activate the speakerphone for hands free conversations.
	VOLUME	Press to increase or decrease the volume of the ringer tone or speakerphone.
6	Alphanumerical keys	Press these keys to enter phone numbers.

Rear View

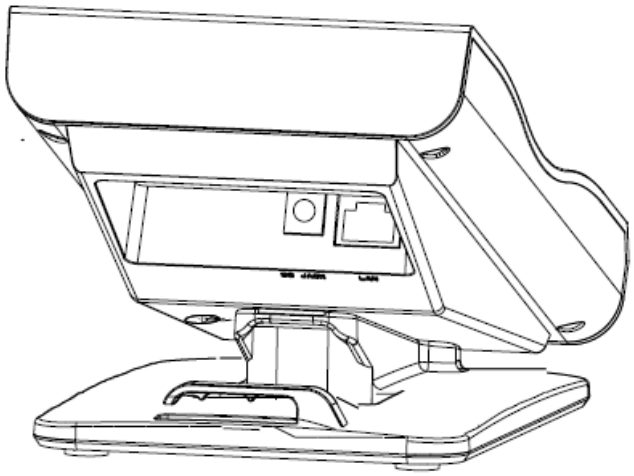

NO.	Name	Description
1	PSTN line port	Connects to PSTN line.
2	DC 6V Power jack	Connects to AC power adapter.

Connecting the Phone

The following illustration shows how to connect the power

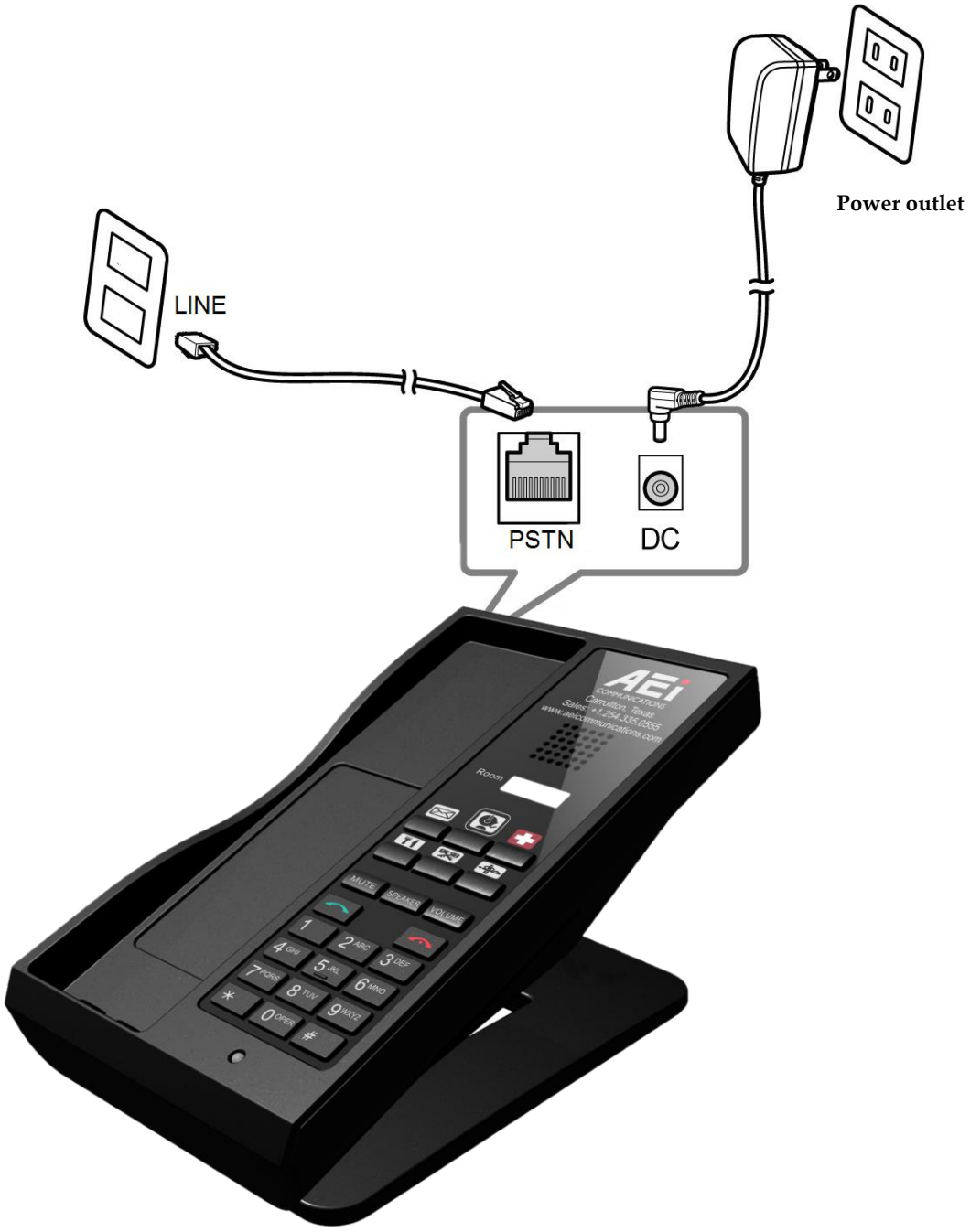

The following illustration shows how to install the phone and stand.

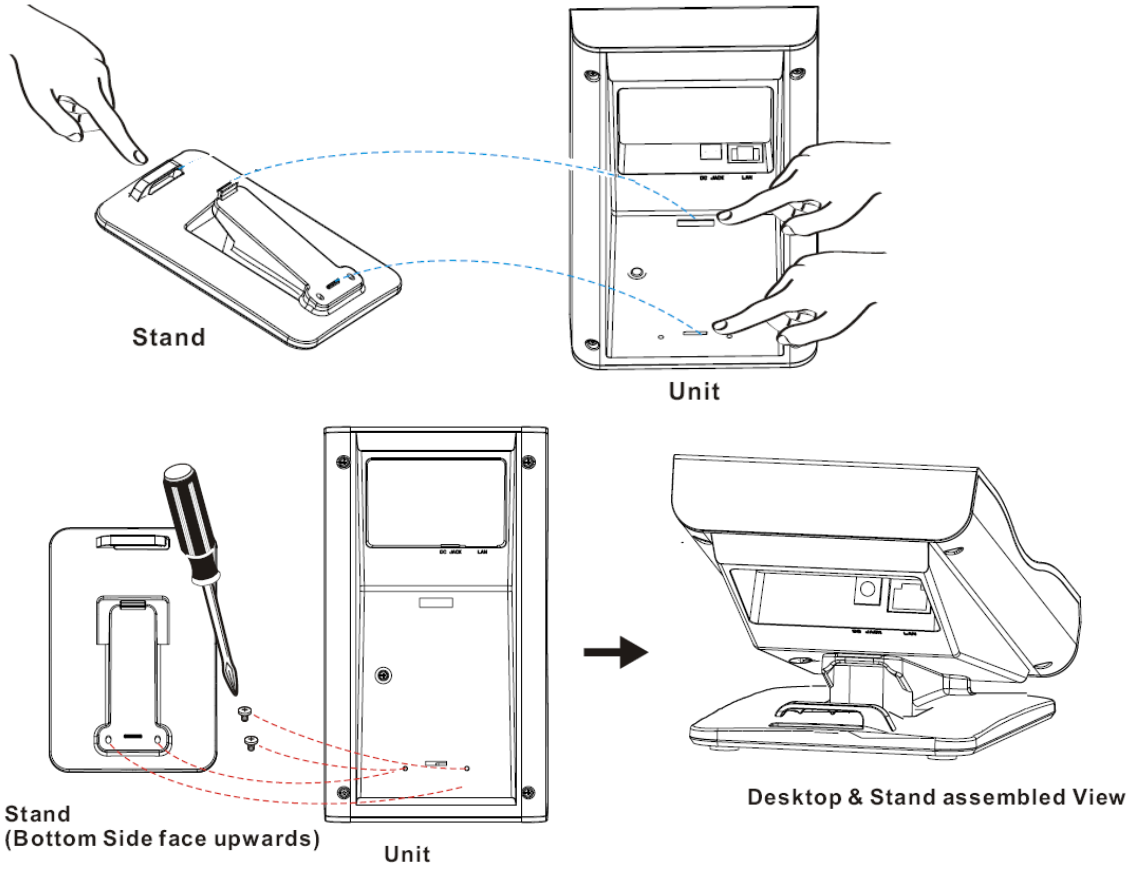

The following illustration shows how to install the handset and battery.

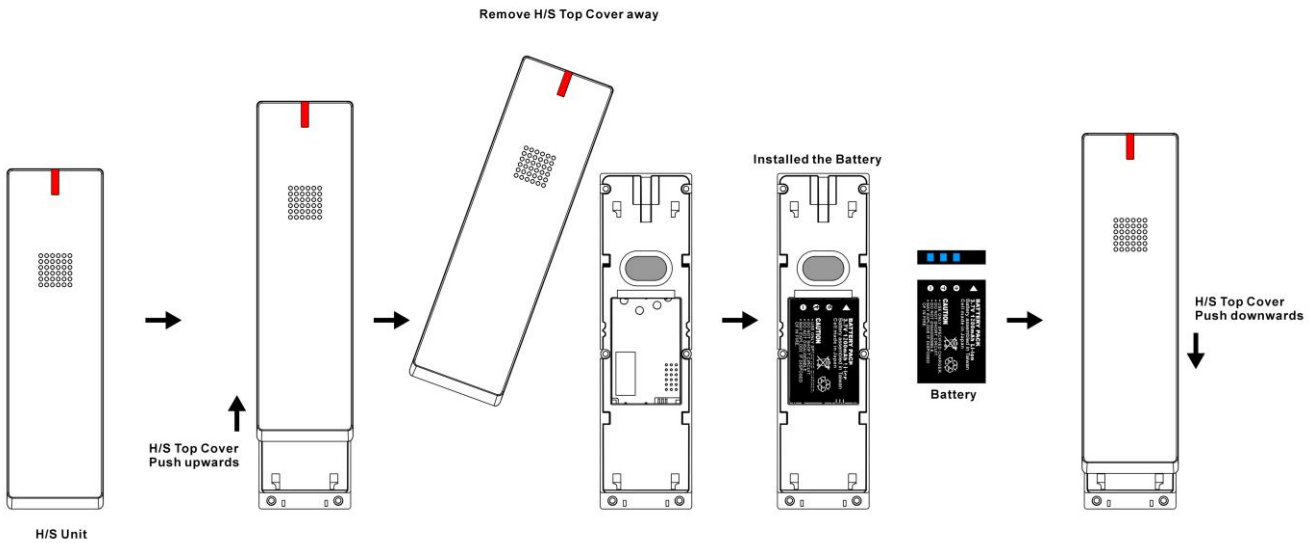

3 Operations

Answering a Call

An incoming call is indicated by a ringing tone and a flashing indicator at the top of both handset and base units. You can answer the call by doing one of the followings:

- Pick up the **handset** to answer the call.
- Press the **Line** key on the base or handset to answer the call.

Making a Call

Dialing with the Keypad

- Enter the telephone number with the alphanumerical keypad and the call will start automatically.

Using the Speed dial keys

You can use the 6 pre-assigned speed dial hotkeys, to configure the most commonly dialed numbers. Use the function to dial a number quickly, instead of keying in a complete number.

To call a number using speed dialing, follow the steps below:

- Press the speed dial hotkey that has been pre-assigned to the phone number and the call will start automatically.

Call Options

While a call is in progress, a number of additional options are available.

Using the Speaker Phone

For hands free operation, you can use the built-in speaker to talk on the phone. To use the speakerphone, follow the steps below:

- While talking on the phone, press the **SPEAKER** key on the phone to enable the Speakerphone function.

Mute a Call

You may need to mute MIC temporarily during a call, do one of the following:

- Press the **MUTE** key on the phone to mute the microphone.
- Press the **MUTE** key again to unmute microphone.

Charging the Handset Battery

You would need to charge the handset battery before using the handset.

- Install the battery into the handset.
- Place the handset onto the base unit and base unit will start to charge the handset automatically.
- The charging indicator lights up in red during charging progress. The LED goes off after the handset battery is fully charged.

Checking Voice Messages

If the **message waiting indicator** at top of handset or base unit lights up in red, it indicates that there are one or more new messages in voicemail box.

- Press the **MESSAGE** key on the phone to retrieve voice messages.

4 Support

For technological support, please email to support@aeicommunication.com.